NOTES:

1. USE 160989 FOR ROOM BAR (PURCHASED SEPARATELY)

2. USE JIG 115 & 206

REVISIONS					
REV.	DATE	DESCRIPTION	ECN	DWR	APVD
E	10/10/2012	UPDATED PRINT, ADDED JIG NOTE		RAW	TG
F	2/20/2015	UPDATE DESCRIPTION; ECN-SP-DE-14180		KSW	SG
G	6/5/2015	ADDED WELD CALLOUTS	ECN-SP-DE-15052	SAB	PP
H	11/25/2015	UPDATED PRINT	ECN-SP-DE-16524	MDS	

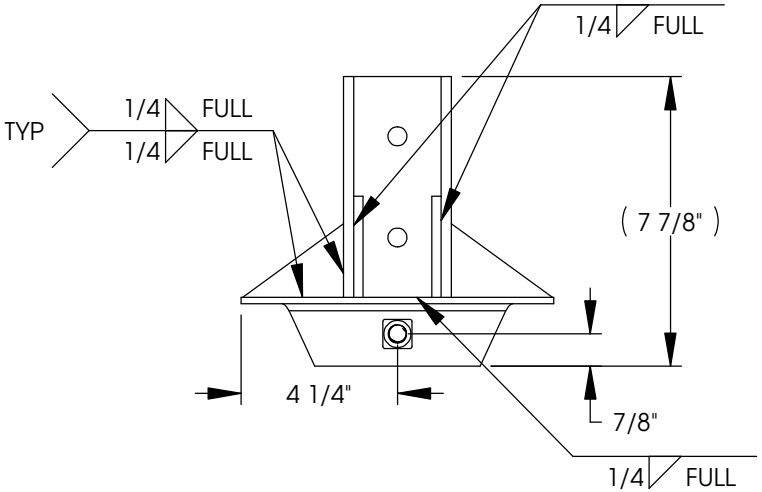

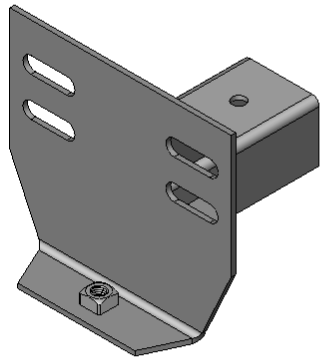

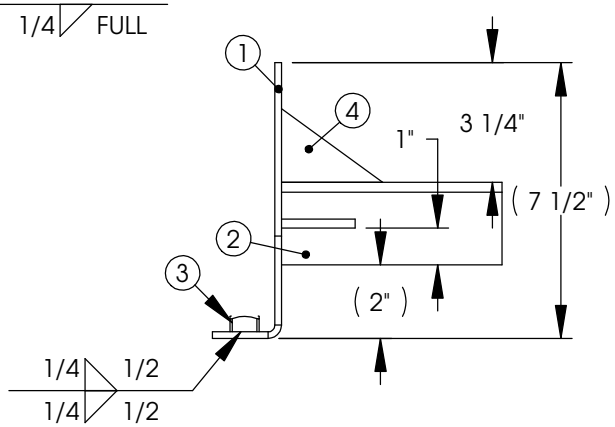

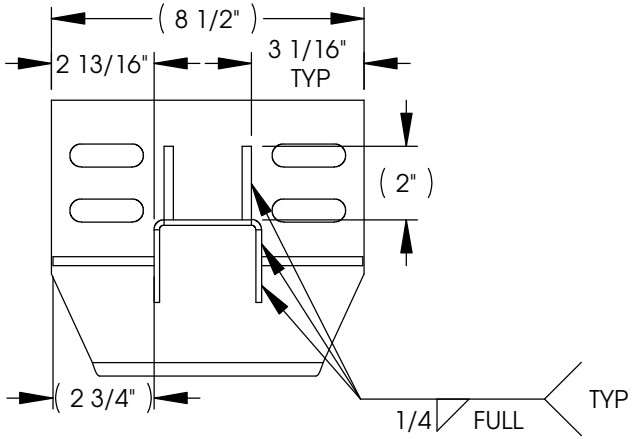

ITEM	PART NO.	CONFIG	DESCRIPTION	NAME	GA	QTY.
1	160994	Default	8 1/2" X 1 7/8" X 7 1/2"	ANG	7	1
2	105968	Default	6" X 2 15/16" X 2 1/4" X 2 1/4"	XMC	9	1
3	118219	Default	NUT - 1/2 - 13; SQUARE	FASTENER		1
4	124172	Default	2 3/4"X2"	PLT	2	4

TITLE: 2 IN DROP HEAD ASSY, 2 1/2 X 2 1/2 FIXED, 4 BOLTS, W/ GUSSETS

UNLESS OTHERWISE SPECIFIED
ALL DIMENSIONS ARE IN INCHES
BREAK SHARP EDGES & DEBURR

FILLETS R.015 | FINISH 125

THIRD ANGLE PROJECTION

TOLERANCES (EXCEPT AS NOTED)
DECIMAL .X ±.1 .XX ±.03 .XXX ±.005
FRACTIONAL ±1/16
ANGULAR ±1°

LIPPERT COMPONENTS
2703 COLLEGE AVE.
GOSHEN, IN 46528

THE INFORMATION CONTAINED IN THIS DRAWING IS THE SOLE PROPERTY OF LIPPERT COMPONENTS, INC. ANY REPRODUCTION IN PART OR AS A WHOLE WITHOUT THE WRITTEN PERMISSION OF LIPPERT COMPONENTS, INC. IS PROHIBITED.

DWG. NO.	SIZE	DATE:	REV.
181289	A	04/16/2008	H
		SCALE: 1:5	

ENG.	DWN.	SHEET	OF
RAW	RAW	1	1