7588 PARTS LIST		
PART#	DESCRIPTION	QUAN
1201	WASHER–1/2 SAE FLAT ZINC	4
1865F	NUT–3/8–16 NYLOCK Z	5
1868F	BOLT–3/8–16 X 1 1/4 HCS ZINC GR 5	2
1884E	WASHER–3/8 SAE FLAT	4
1889DD	NUT–1/2–13 REV LOCK	1
2168	FOOT–8 X 5 RV	1
2809	SCREW–3/4–8 ACME	1
2810	NUT–ACME 3/4–8LH	1
2811	BEARING–THRUST 1/2	1
2812	BEARING–FLANGE 1/2 X 5/8	1
2813	SPACER–THRUST 1/2	1
2814	BUTTON–WEAR PAD	1
2815	COUPLER–DRIVE	1
2816	BOLT–5/16–18 X 5/8 FLANGE	2
2818	BOLT–3/8–16 X 3 1/2 HHCS	1
2819	BOLT–1/2–13 X 3 HHCS	1
2820	PIN–1/4 X 1 ROLL	1
2821	PIN–3/16 X 3/4 ROLL	1
2822	SCREW–1/4–20 X 3/8 SHCS	2
2823	BUSHING–1/4 ID X 3/8 OD X 3/16	2
2824A	STABILIZER–BASE–CHANNEL	1
2824B	STABILIZER–BASE–TUBE W/TABS	1
2825	STABILIZER–SIDE BRACE	2
2826	STABILIZER–LEG	1
3279	BOLT–3/8–16 X 1 HEX HEAD CAP ZINC	2
6836	HARNESS, STABI–LITE MOTOR W/CONNECTOR ADDED	1

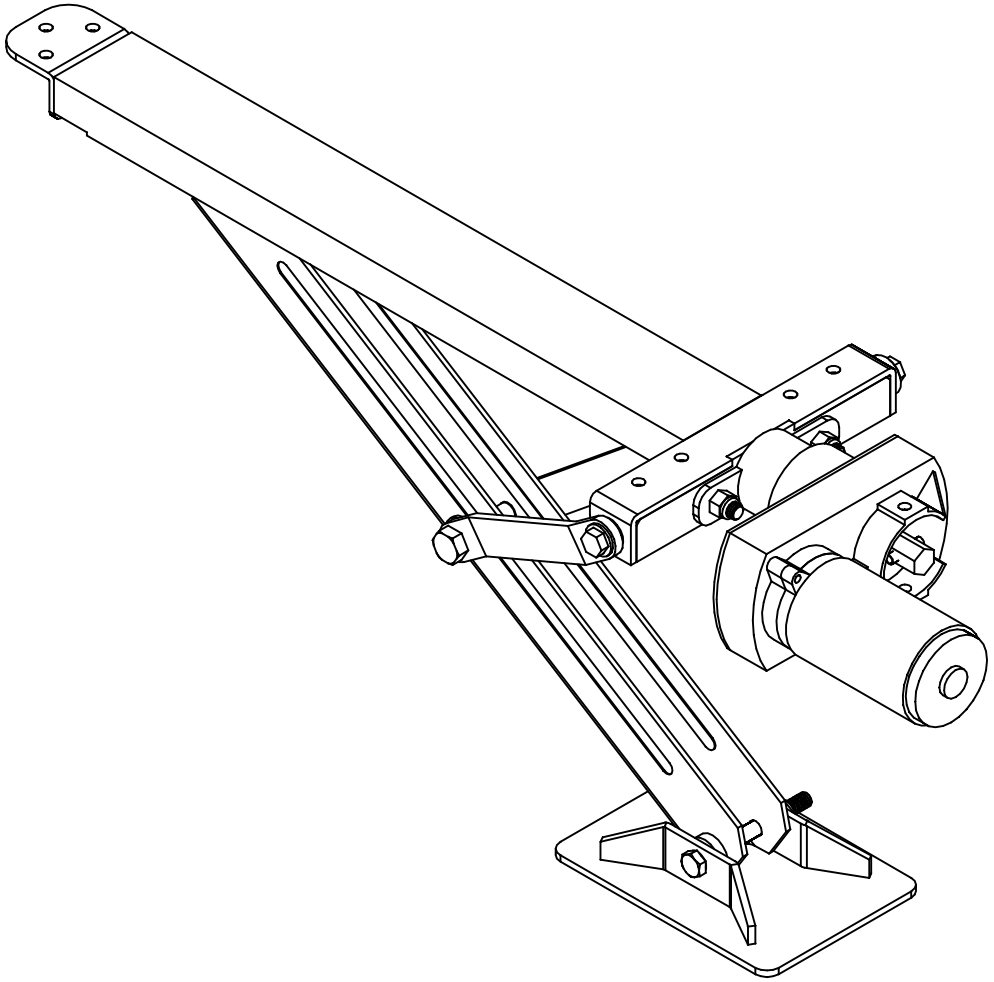

Equalizer 55169 COUNTY ROAD 3
ELKHART, IN 46515

NOTICE – This drawing, including principles of design, is the property of Days Corporation, Elkhart, Indiana, with the agreement that it is not to be reproduced, copied, or loaned in any manner that may constitute a detriment directly or indirectly to Days Corporation. Acceptance of this will be construed as an agreement of the above.

#	REVISIONS	BY:	DATE:
A	CHANGED 2824 TO 2 PIECE 2824A & 2824B	SJ	1/25/17

UNLESS OTHERWISE SPECIFIED:
TOLERANCES:
.XXX ± 0.010
.XX ± 0.010
.X ± 0.030
ANG. ± 1/2°
REMOVE ALL BURRS AND SHARP EDGES .015 MAX

TITLE STABI–LITE LEG ASSEMBLY			USED ON: STABI–LITE SYSTEMS
SIZE A	SCALE 1: 1	MATERIAL ——— ——— ——— ———	
DRW BY: SJ	DATE: 9/14/10	PART NAME: STABI–LITE LEG ASSEMBLY	
APP'D BY –	DATE: –	PAGE: 1 OF 2	DWG NO.: 7588	REV: A

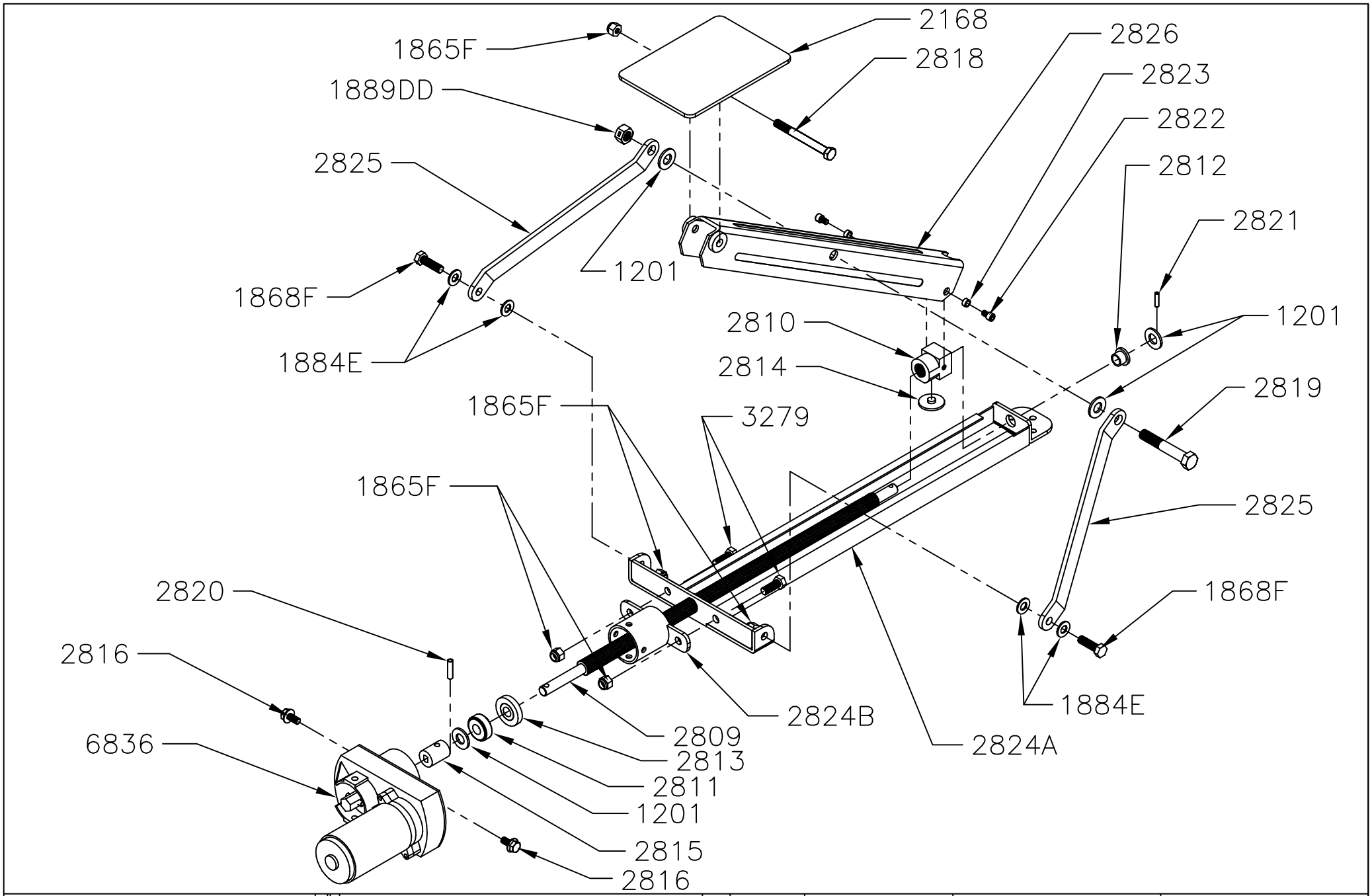

Equalizer 55169 COUNTY ROAD 3 ELKHART, IN 46515	#	REVISIONS	BY:	DATE:	UNLESS OTHERWISE SPECIFIED: TOLERANCES: .XXX ± 0.010 .XX ± 0.010 .X ± 0.030 ANG. ± 1/2° REMOVE ALL BURRS AND SHARP EDGES .015 MAX	TITLE STABI-LITE LEG ASSEMBLY		USED ON: STABI-LITE SYSTEMS	
	A	CHANGED 2824 TO 2 PIECE 2824A & 2824B	SJ	1/25/17		SIZE A	SCALE 1: 1	MATERIAL ——— ——— ——— ———	
NOTICE – This drawing, including principles of design, is the property of Days Corporation, Elkhart, Indiana, with the agreement that it is not to be reproduced, copied, or loaned in any manner that may constitute a detriment directly or indirectly to Days Corporation. Acceptance of this will be construed as an agreement of the above.						DRW BY: SJ	DATE: 9/14/10	PART NAME: STABI-LITE LEG ASSEMBLY	
						APP'D BY —	DATE: —	PAGE: 2 OF 2	DWG NO.: 7588	REV: A