HYDRO LIFE

THE BACTERIA FIGHTER • THE BACTERIA FIGHTER • THE BACTERIA FIGHTER

MODEL HL-170 QC KIT

NEW INSTALLATION:

1. Lay out and identify all parts shown in filter parts diagram.

2. Shut off water supply. Place drip pan under area where filter will be installed, there may be some drainage from water line.

3. Attach mounting bracket (F) to a solid location so filter can be mounted vertically.

4. Cut water line at location where filter will be mounted. The filter and connectors will take up approximately 17-1/2 inches. If necessary cut several inches out of the water line, but before cutting off any additional water line, make sure there is enough water line at both ends to comfortably connect to the filter.

5. Unscrew swivel nuts from both compression swivel connectors (G) and slide nuts onto both water lines. Push barb end into water lines as far as possible, then thread both swivel nuts tightly onto compression swivel connector (G). Now thread quick connect coupling with shut off (D) into end of compression swivel connector (G) on incoming water line.

6. Carefully screw the quick connect coupling (E) onto top compression swivel connector.

7. To mount filter in bracket, carefully insert filter into mounting bracket (F). Be sure the arrow on filter is pointing in the direction the water will flow. Insert filter into top and bottom quick connect couplers and click into place. Push filter inward until bracket clamp snaps closed.

8. Slowly turn on water and check complete system for leaks. Allow water to flow several minutes to flush the system.

IMPORTANT:

- Do not allow filter to freeze.
- Replace filter annually to maintain high quality water.
- When winterizing do not allow anti-freeze to flow through filter (see reverse for complete instructions on winterizing your filter).
- Do not use where water is microbiologically unsafe or of unknown quality.
- If your RV or watercraft has not been used recently, turn water on and allow it to flow for several minutes to flush the system.
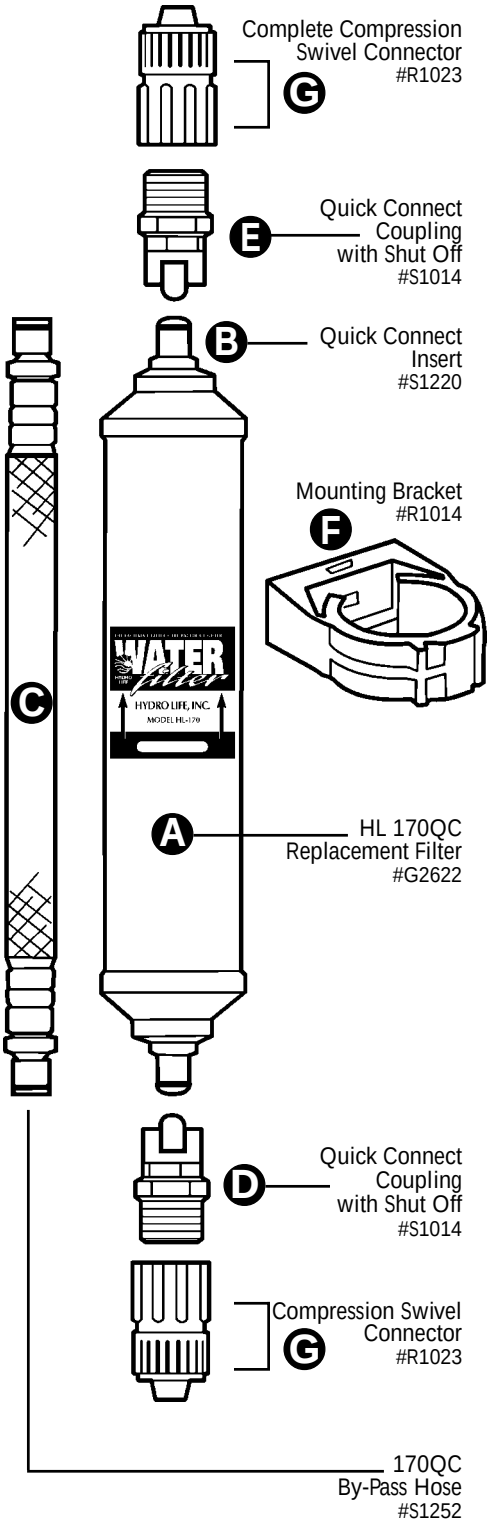
If you should need assistance, please call your RV or marine parts dealer.