B&W Trailer Hitches
1216 Hawaii Road / PO Box 186
Humboldt, KS 66748
P:620.473.3664
F:620.473.3766

NOTE: *we recommend reading instructions before beginning the installation.*

Heavy Duty Receiver Hitch Installation Instructions

Model HDRH25198

Call or Email us for Installation Support
hitches@turnoverball.com **www.turnoverball.com**

Vehicle Make and Years

1967-1996 Ford 1/2 Ton Trucks with 10" step bumper
1967-1998 Ford 3/4, and 1 Ton trucks with 10" step bumper

PARTS LIST

ID	DESCRIPTION	QUANTITY
1	- RECEIVER HITCH ASSEMBLY	1
2	- DRIVER SIDE PLATE	1
3	- PASSENGER SIDE PLATE	1
4	- TRAILER PLUG BRACKET	1
5	- ½-13 X 2" HEX HEAD CAP SCREW	6
6	- ½-13 X 1-1/2" HEX HEAD CAP SCREW	9
7	- ½-13 HEX FINISH NUT	15
8	- ½" SPLIT LOCK WASHER	15
9	- SPACER 3/16 X 1 X 1½	6
10	- SPACER 3/16 X 1¼ X 1½	6
11	- SPACER 3/16 X 1½ X 3	2
12	- #14 X 3/4 SHEET METAL SCREW	2

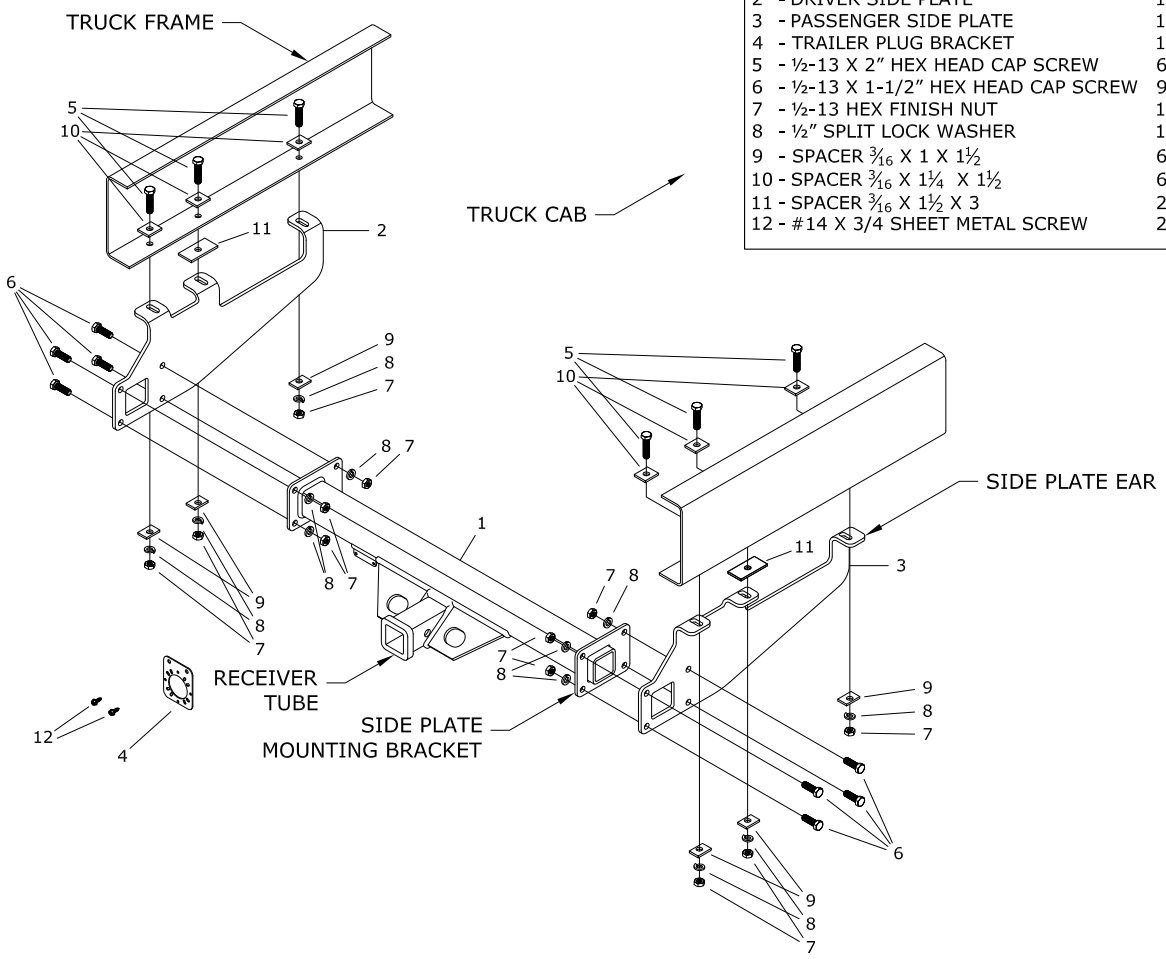

BEFORE INSTALLING

WARNING

Although this hitch contains a V-5 rating of 16,000 lb. WC, the tow vehicle manufacturers recommended towing capacities should under NO circumstances be exceeded.

WARNING

B&W Receiver Hitches are designed to fit vehicles as produced by the factory. Any equipment or accessories added to the vehicle may affect the fit of the hitch. B&W will not warranty the hitch if any alterations are made during the installation process. Occasionally there are rare vehicle options that may prohibit the hitch from installing properly. Please contact the manufacturer for support if this is the case.

WARNING

Always use safety chains while towing. Crossing the safety chains under the tongue of trailer may prevent some damage to the trailer if detachment occurs.

WARNING

Periodically inspect hitch, making sure that all fasteners are tightly secured.

BEFORE INSTALLING

This receiver hitch may require slight modification to the frame or other structure of the vehicle such as drilling or relocating equipment so that the hitch may be installed in the proper location. It is very important to make sure that you have the correct hitch for your application before any modifications to the vehicle are made.

If the vehicle is equipped with a spare tire carrier that spans the width of the frame, carrying the spare tire directly under the pickup bed between the frame rails, the carrier may have to be removed or modified so that the hitch will install properly. The initial positioning of the hitch under the vehicle in step 2 will reveal whether or not the carrier will interfere with the hitch. If removing the carrier and relocating the spare tire is not an option, the carrier can be modified to accommodate the hitch. The portion of the carrier that accepts the tire tool for lifting the carrier may interfere with the hitch. If so, this part of the carrier must be removed and relocated, See figure 1.1. A kit is available from B&W if needed which will replace the portion of the carrier removed to clear the hitch.

Remove spare tire before installation. This will provide easier access to the frame. Be sure that the vehicle frame where the hitch will mount is free from debris or other material that may interfere with the installation.

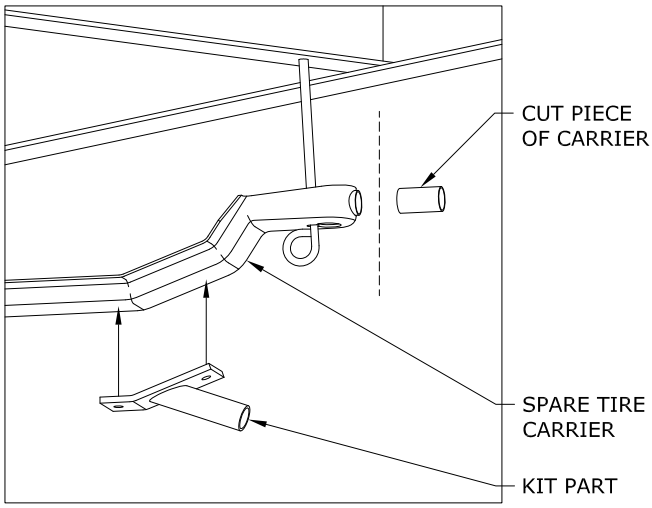

FIGURE 1.1: View under bed looking at passenger side.

STEP 1: HITCH ASSEMBLY

Assemble the hitch as shown on the main diagram using the ½" x 1-½" long bolts, lock washers and nuts. For 37-½" wide vehicle frames, attach the side plates to the hitch center section with the "ears" of the side plates toward the outside as shown in the main diagram. If the frame is 34" wide, attach the side plates so that the "ears" are toward the inside. Do not fully tighten the hardware at this time.

STEP 2: POSITIONING HITCH

Loosen spare tire carrier if needed. Position the hitch under the frame as shown in the main diagram. The rear most side plate ears should be just rearward of the rivet head protruding from the bottom of the frame members, See figure 2.1. Temporarily secure the hitch into place with clamps or other method. Make sure that the hitch is centered between the frame rails of the vehicle and that the receiver tube is parallel to the centerline of the truck.

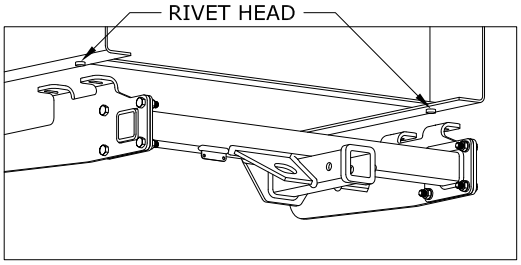

FIGURE 2.1: View under bed

STEP 3: DRILLING

With the hitch temporarily secured to the frame, drill a ½" hole through the slots in the side plate ears and into the bottom of the frame rails as needed for mounting the hitch. Drill holes approximately in the center of the bottom flange of the truck frame so that there is room for wrench clearance on the head of the bolts.

STEP 4: MOUNTING HITCH

Install hardware as shown in the main diagram, fastening the hitch to the frame. Make sure that spacer number 11 is placed between the middle ears of the side plates and the bottom of the frame to fill the empty space.

STEP 5: TIGHTENING HARDWARE

Tighten the hardware on the connections between the frame and the side plates first. Torque the bolts to 80 foot pounds. Next make sure that the edges of the side plate mounting brackets on the center section match up with the bottom and rearward edges of the side plates and tighten these connections. Torque these bolts to 80 foot pounds as well. Replace spare tire and remove any clamping devices installed during step 2.

STEP 6: OPTIONAL BRACKET INSTALLATION

An optional trailer plug mounting bracket has been included with this hitch. If your vehicle does not have a place to mount the trailer wiring receptacle, this bracket will accept many different receptacles on the market. Mount the bracket using the two self-tapping sheet metal screws as shown in diagram 6.1. Be aware of ground clearance limitations that this wiring plug bracket or any other may add to the hitch.

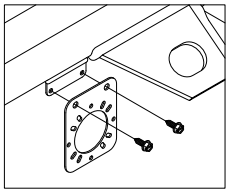
FIGURE 6.1

Copyright 2015
B&W Custom Truck Beds, Inc.
ALL RIGHTS RESERVED

B&W Trailer Hitches
1216 Hawaii Road / PO Box 186
Humboldt, KS 66748
P:620.473.3664
F:620.473.3766

NOTE: *we recommend reading instructions before beginning the installation.*

Heavy Duty Receiver Hitch Installation Instructions

Model HDRH25198

Call or Email us for Installation Support
hitches@turnoverball.com **www.turnoverball.com**

Vehicle Make and Years

1972-1993 Dodge 1/2, 3/4, and 1 Ton trucks with 10" step bumper

PARTS LIST

ID	DESCRIPTION	QUANTITY
1	- HITCH CENTER SECTION	1
2	- DRIVER SIDE PLATE	1
3	- PASSENGER SIDE PLATE	1
4	- TRAILER PLUG BRACKET	1
5	- ½-13 X 2" HEX HEAD CAP SCREW	6
6	- ½-13 X 1-1/2" HEX HEAD CAP SCREW	9
7	- ½-13 HEX FINISH NUT	15
8	- ½" SPLIT LOCK WASHER	15
9	- SPACER 3/16 X 1 X 1½	6
10	- SPACER 3/16 X 1¼ X 1½	6
11	- SPACER 3/16 X 1½ X 3	2
12	- #14 X 3/4 SHEET METAL SCREW	2

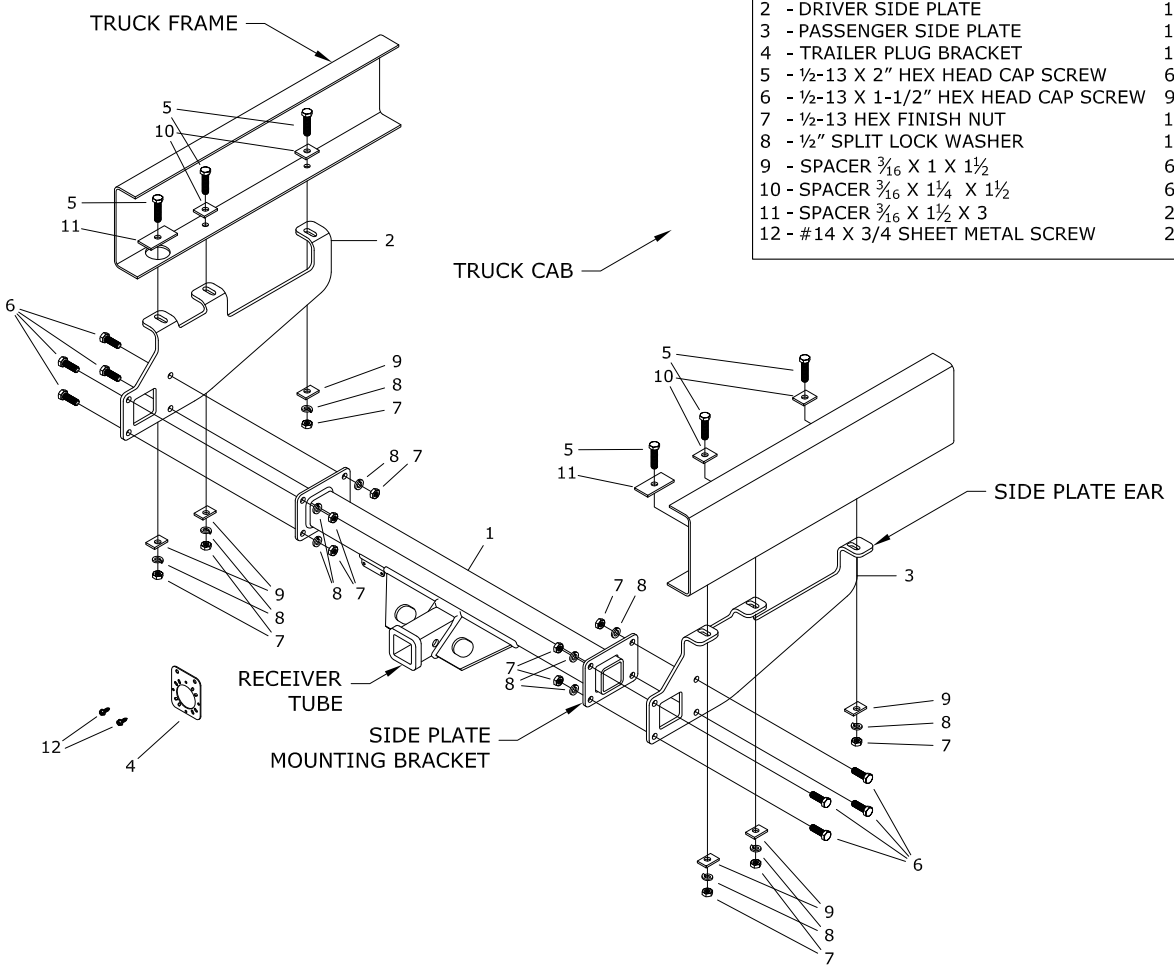

BEFORE INSTALLING

WARNING

Although this hitch contains a V-5 rating of 16,000 lb. WC, the tow vehicle manufacturers recommended towing capacities should under NO circumstances be exceeded.

WARNING

B&W Receiver Hitches are designed to fit vehicles as produced by the factory. Any equipment or accessories added to the vehicle may affect the fit of the hitch. B&W will not warranty the hitch if any alterations are made during the installation process. Occasionally there are rare vehicle options that may prohibit the hitch from installing properly. Please contact the manufacturer for support if this is the case.

WARNING

Always use safety chains while towing. Crossing the safety chains under the tongue of trailer may prevent some damage to the trailer if detachment occurs.

WARNING

Periodically inspect hitch, making sure that all fasteners are tightly secured.

BEFORE INSTALLING

This receiver hitch may require slight modification to the frame or other structure of the vehicle such as drilling or relocating equipment so that the hitch may be installed in the proper location. It is very important to make sure that you have the correct hitch for your application before any modifications to the vehicle are made.

On most vehicle models from 1972 to 1993 the spare tire and spare tire hanger bolt will need to be removed before installing the hitch. On models from 1994 to 1996 the rear exhaust hanger bracket will need to be removed before installation.

Remove spare tire before installation. This will provide easier access to the frame. Be sure that the vehicle frame where the hitch will mount is free from debris or other material that may interfere with the installation.

STEP 1: HITCH ASSEMBLY

Assemble the hitch as shown on the main diagram using the ½" x 1-½" long bolts, lock washers and nuts. Attach the side plates to the hitch center section with the "ears" of the side plates toward the out side as shown in the main diagram. Do not fully tighten the hardware at this time.

STEP 2: POSITIONING HITCH

Position the hitch under the frame as shown in the main diagram. Align the slots in the rearward ears of the side plates with the large hole in the rear of the vehicle frame. see main diagram. Attach the hitch to the frame in these two locations with the hardware as shown. Make sure that the hitch is centered between the frame rails of the vehicle and that the receiver tube is parallel to the centerline of the truck. Tighten these two bolts so that the hitch is held firmly against frame. It may be necessary to use additional clamps.

STEP 3: DRILLING

With the hitch temporarily secured to the frame, drill a ½" hole through the slots in the remaining side plate ears and into the bottom of the frame rails as needed for mounting the hitch. Drill holes approximately in the center of the bottom flange of the truck frame so that there is room for wrench clearance on the head of the bolts.

STEP 4: MOUNTING HITCH

Install the remaining hardware as shown in the main diagram, fastening the hitch to the frame. On 1994 to 1996 models, use a 1-½" long bolt in the forward most ear of the side plate on the passenger side. This shorter bolt will provide clearance for the exhaust hanger bracket that was removed.

STEP 5: TIGHTENING HARDWARE

Tighten the hardware on the connections between the frame and the side plates first. Torque the bolts to 80 foot pounds. Next make sure that the edges of the side plate mounting brackets on the center section match up with the bottom and rearward edges of the side plates and tighten these connections. Torque these bolts to 80 foot pounds as well. Remove any clamping devices installed during step 2. Replace spare tire. Replace exhaust hanger bracket on 1994 to 1996 models.

STEP 6: OPTIONAL BRACKET INSTALLATION

An optional trailer plug mounting bracket has been included with this hitch. If your vehicle does not have a place to mount the trailer wiring receptacle, this bracket will accept many different receptacles on the market. Mount the bracket using the two self-tapping sheet metal screws as shown in diagram 6.1. Be aware of ground clearance limitations that this wiring plug bracket or any other may add to the hitch.

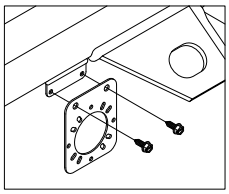

FIGURE 6.1

Copyright 2015
B&W Custom Truck Beds, Inc.
ALL RIGHTS RESERVED

B&W Trailer Hitches
1216 Hawaii Road / PO Box 186
Humboldt, KS 66748
P:620.473.3664
F:620.473.3766

NOTE: *we recommend reading instructions before beginning the installation.*

Heavy Duty Receiver Hitch Installation Instructions

Model HDRH25198

Call or Email us for Installation Support
hitches@turnoverball.com **www.turnoverball.com**

Vehicle Make and Years

1973-1987 Chevy/GMC 1/2, 3/4, and 1 Ton long bed trucks with 10" step bumper
1988-2009 Chevy/GMC Cab & Chassis (34" frame) 8" Drop

PARTS LIST

ID	DESCRIPTION	QUANTITY
1	- HITCH CENTER SECTION	1
2	- DRIVER SIDE PLATE	1
3	- PASSENGER SIDE PLATE	1
4	- TRAILER PLUG BRACKET	1
5	- ½-13 X 2" HEX HEAD CAP SCREW	6
6	- ½-13 X 1-1/2" HEX HEAD CAP SCREW	9
7	- ½-13 HEX FINISH NUT	15
8	- ½" SPLIT LOCK WASHER	15
9	- SPACER 3/16 X 1 X 1½	6
10	- SPACER 3/16 X 1¼ X 1½	6
11	- SPACER 3/16 X 1½ X 3	2
12	- #14 X 3/4 SHEET METAL SCREW	2
13	- SPARE TIRE "L" BRACKET	1

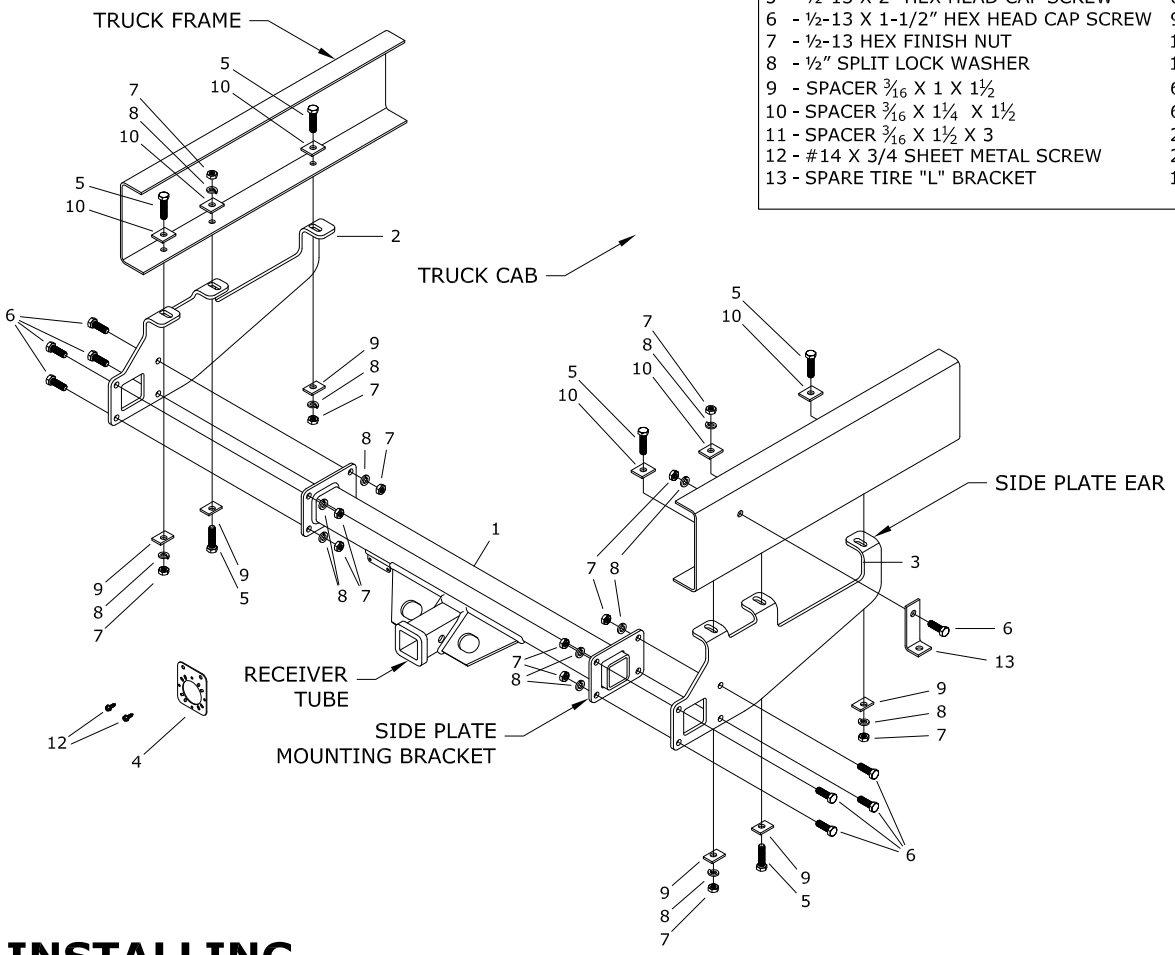

BEFORE INSTALLING

WARNING

Although this hitch contains a V-5 rating of 16,000 lb. WC, the tow vehicle manufacturers recommended towing capacities should under NO circumstances be exceeded.

WARNING

B&W Receiver Hitches are designed to fit vehicles as produced by the factory. Any equipment or accessories added to the vehicle may affect the fit of the hitch. B&W will not warranty the hitch if any alterations are made during the installation process. Occasionally there are rare vehicle options that may prohibit the hitch from installing properly. Please contact the manufacturer for support if this is the case.

WARNING

Always use safety chains while towing. Crossing the safety chains under the tongue of trailer may prevent some damage to the trailer if detachment occurs.

WARNING

Periodically inspect hitch, making sure that all fasteners are tightly secured.

BEFORE INSTALLING

This receiver hitch may require slight modification to the frame or other structure of the vehicle such as drilling or relocating equipment so that the hitch may be installed in the proper location. It is very important to make sure that you have the correct hitch for your application before any modifications to the vehicle are made.

Remove spare tire and spare tire carrier bolt before installation.. Any brackets or accessories not critical to the structure of the vehicle that are mounted to the bottom of the frame at the rear may need to be removed. See the steps on positioning and mounting the hitch for the hitch location to see if there will be any interference. Bumper reinforcement brackets can be removed if the bumper will not be used for towing.

Be sure that the vehicle frame where the hitch will mount is free from debris or other material that may interfere with the installation.

STEP 1: HITCH ASSEMBLY

Assemble the hitch as shown on the main diagram using the ½" x 1-½" long bolts, lock washers and nuts. Attach the side plates to the hitch center section with the "ears" of the side plates toward the inside as shown in the main diagram. Do not fully tighten the hardware at this time.

STEP 2: INSTALLING HARDWARE

Place the bolts and spacers for the rearward and forward side plate ears into the existing holes in the frame as shown allowing the threaded portion of the bolts to protrude downward from the frame.

STEP 3: POSITIONING/MOUNTING HITCH

Position the hitch, placing the ears of the side plates over the bolts installed in step 2. Secure these four connections with spacers, lock washers, and nuts as shown in the main diagram. Hand tighten the hardware only at this time. Next install the hardware into the middle side plate ears as shown. The head of the bolt should be down.

STEP 4: TIGHTENING HARDWARE

Tighten the hardware on the connections between the frame and the side plates first. Torque the bolts to 80 foot pounds. Next make sure that the edges of the side plate mounting brackets on the center section match up with the bottom and rearward edges of the side plates and tighten these connections. Torque these bolts to 80 foot pounds as well. Position the spare tire "L" bracket as shown on main diagram and install spare tire carrier bolt through the hole in the "L" bracket. Replace the spare tire.

STEP 6: OPTIONAL BRACKET INSTALLATION

An optional trailer plug mounting bracket has been included with this hitch. If your vehicle does not have a place to mount the trailer wiring receptacle, this bracket will accept many different receptacles on the market. Mount the bracket using the two self-tapping sheet metal screws as shown in diagram 6.1. Be aware of ground clearance limitations that this wiring plug bracket or any other may add to the hitch.

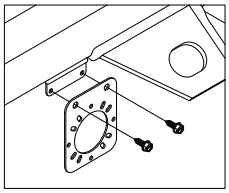

FIGURE 6.1

Copyright 2015
B&W Custom Truck Beds, Inc.
ALL RIGHTS RESERVED

B&W Trailer Hitches
1216 Hawaii Road / PO Box 186
Humboldt, KS 66748
P:620.473.3664
F:620.473.3766

NOTE: *we recommend reading instructions before beginning the installation.*

Heavy Duty Receiver Hitch Installation Instructions

Model HDRH25198

Call or Email us for Installation Support
hitches@turnoverball.com **www.turnoverball.com**

Vehicle Make and Years

1999-2012 Ford Cab & Chassis (34" Frame) 8" Drop

PARTS LIST

ID	DESCRIPTION	QUANTITY
1	- HITCH CENTER SECTION	1
2	- DRIVER SIDE PLATE	1
3	- PASSENGER SIDE PLATE	1
4	- TRAILER PLUG BRACKET	1
5	- ½-13 X 2" HEX HEAD CAP SCREW	6
6	- ½-13 X 1-1/2" HEX HEAD CAP SCREW	9
7	- ½-13 HEX FINISH NUT	15
8	- ½" SPLIT LOCK WASHER	15
9	- SPACER 3/16 X 1 X 1½	6
10	- SPACER 3/16 X 1¼ X 1½	6
11	- SPACER 3/16 X 1½ X 3	2
12	- #14 X 3/4 SHEET METAL SCREW	2

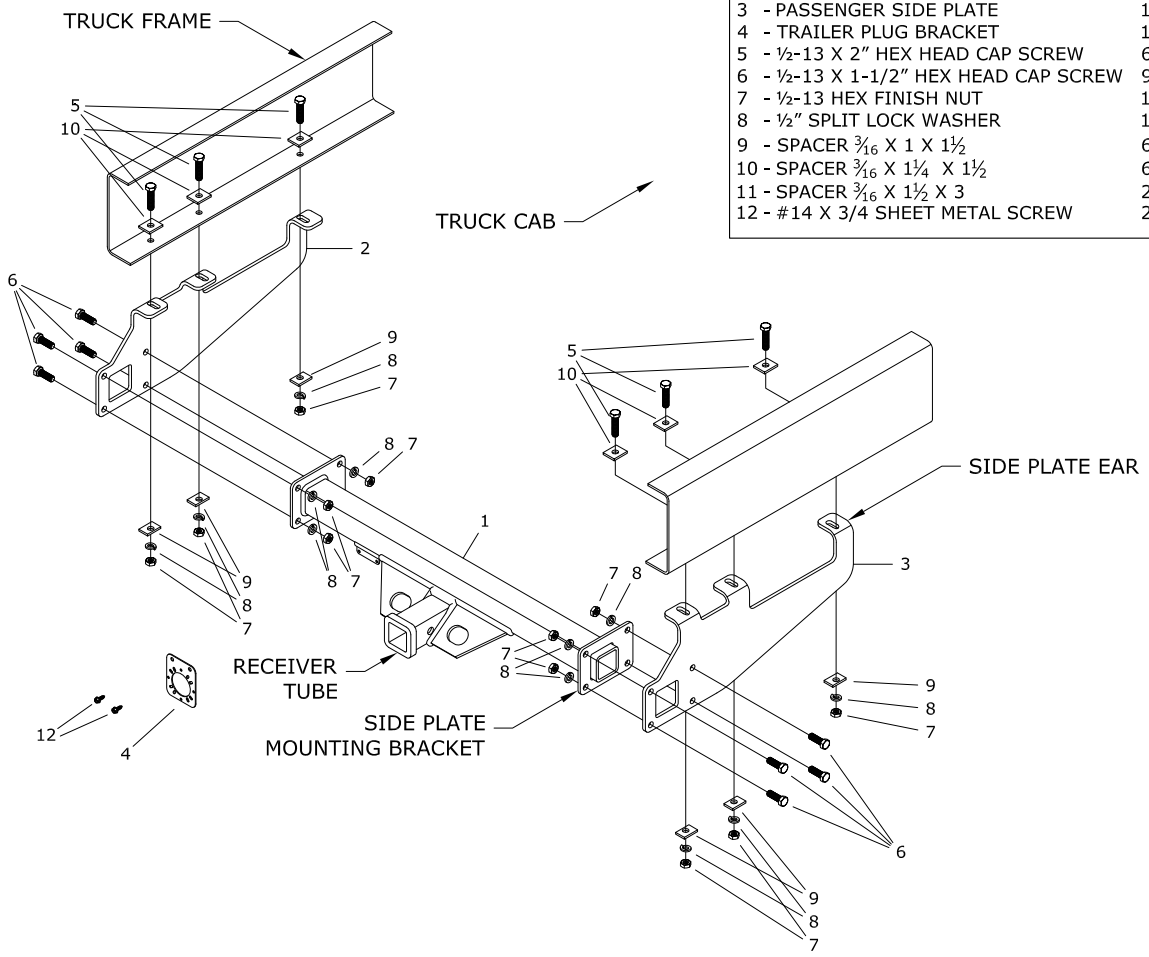

BEFORE INSTALLING

WARNING

Although this hitch contains a V-5 rating of 16,000 lb. WC, the tow vehicle manufacturers recommended towing capacities should under NO circumstances be exceeded.

WARNING

B&W Receiver Hitches are designed to fit vehicles as produced by the factory. Any equipment or accessories added to the vehicle may affect the fit of the hitch. B&W will not warranty the hitch if any alterations are made during the installation process. Occasionally there are rare vehicle options that may prohibit the hitch from installing properly. Please contact the manufacturer for support if this is the case.

WARNING

Always use safety chains while towing. Crossing the safety chains under the tongue of trailer may prevent some damage to the trailer if detachment occurs.

WARNING

Periodically inspect hitch, making sure that all fasteners are tightly secured.

BEFORE INSTALLING

This receiver hitch may require slight modification to the frame or other structure of the vehicle such as drilling or relocating equipment so that the hitch may be installed in the proper location. It is very important to make sure that you have the correct hitch for your application before any modifications to the vehicle are made.

If the vehicle is equipped with a spare tire carrier that spans the width of the frame, carrying the spare tire directly under the pickup bed between the frame rails, the carrier may have to be removed or modified so that the hitch will install properly. The initial positioning of the hitch under the vehicle in step 2 will reveal whether or not the carrier will interfere with the hitch. If removing the carrier and relocating the spare tire is not an option, the carrier can be modified to accommodate the hitch. The portion of the carrier that accepts the tire tool for lifting the carrier may interfere with the hitch. If so, this part of the carrier must be removed and relocated, See figure 1.1. A kit is available from B&W if needed which will replace the portion of the carrier removed to clear the hitch.

Removing the spare tire before installation of the hitch may be helpful. Be sure that the vehicle frame where the hitch will mount is free from debris or other material that may interfere with the installation.

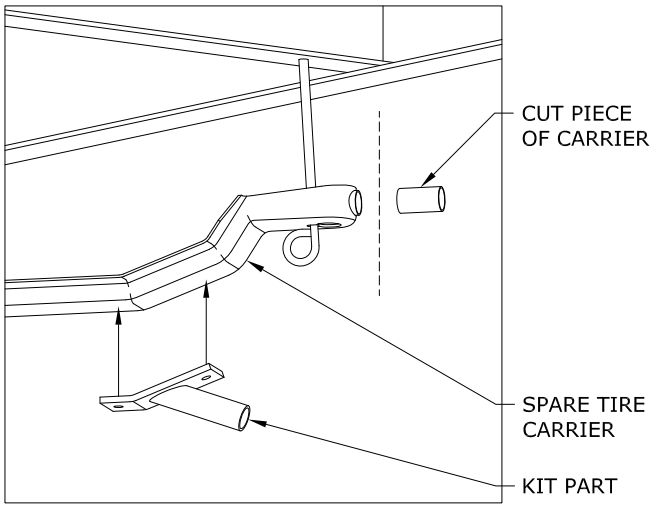

FIGURE 1.1: View under bed looking at passenger side.

STEP 1: HITCH ASSEMBLY

Assemble the hitch as shown on the main diagram using the ½" x 1-½" long bolts, lock washers and nuts. Attach the side plates so that the "ears" are toward the inside. See main diagram. Do not fully tighten the hardware at this time.

STEP 2: POSITIONING HITCH

Loosen spare tire carrier if needed. Position the hitch under the frame as shown in the main diagram. The rear most side plate ears should be just rearward of the rivet head protruding from the bottom of the frame members, See figure 2.1. Temporarily secure the hitch into place with clamps or other method. Make sure that the hitch is centered between the frame rails of the vehicle and that the receiver tube is parallel to the centerline of the truck.

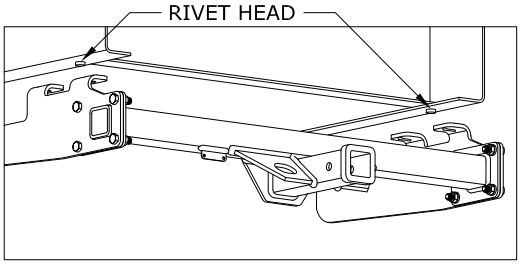

FIGURE 2.1: View under bed

STEP 3: DRILLING

With the hitch temporarily secured to the frame, drill a ½" hole through the slots in the side plate ears and into the bottom of the frame rails as needed for mounting the hitch. Drill holes approximately in the center of the bottom flange of the truck frame so that there is room for wrench clearance on the head of the bolts.

STEP 4: MOUNTING HITCH

Install hardware as shown in the main diagram, fastening the hitch to the frame. Be sure to place each spacer in its proper location as shown on the main diagram.

STEP 5: TIGHTENING HARDWARE

Tighten the hardware on the connections between the frame and the side plates first. Torque the bolts to 80 foot pounds. Next make sure that the edges of the side plate mounting brackets on the center section match up with the bottom and rearward edges of the side plates and tighten these connections. Torque these bolts to 80 foot pounds as well. Remove any clamping devices installed during step 2.

STEP 6: OPTIONAL BRACKET INSTALLATION

An optional trailer plug mounting bracket has been included with this hitch. If your vehicle does not have a place to mount the trailer wiring receptacle, this bracket will accept many different receptacles on the market. Mount the bracket using the two self-tapping sheet metal screws as shown in diagram 6.1. Be aware of ground clearance limitations that this wiring plug bracket or any other may add to the hitch.

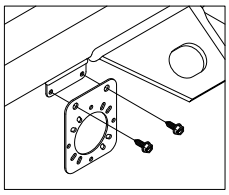
FIGURE 6.1

Copyright 2015
B&W Custom Truck Beds, Inc.
ALL RIGHTS RESERVED